| ※ | 品番 | 部品ｺｰﾄﾞ | 部品名 | 要数 |
|---|---|---|---|---|
| | 001 | 420645BGA | ﾓｰﾀｰｹｰｽ CP (1) | 1 |
| | A | 420645BG0 | ﾓｰﾀｰｹｰｽ | 1 |
| | B | 420645AL0 | ｽﾛｯﾄﾙﾊﾞﾙﾌﾞﾋﾟﾝ | 1 |
| | C | 420645AD0 | ｽﾛｯﾄﾙﾊﾞﾙﾌﾞﾌﾞｯｼｭ (ｸﾐﾀﾃﾖｳ) | 1 |
| | D | 420645AT0 | ｽﾛｯﾄﾙﾊﾞﾙﾌﾞｷｰ | 1 |
| | E | 41000136B | ﾆｯﾌﾟﾙ(ｱﾐﾂｷ) | 1 |
| | F | 136501006 | ﾎﾟﾘｷｬｯﾌﾟ 3/4 | 1 |
| | 002 | 420645AA0 | ｽﾛｯﾄﾙﾊﾞﾙﾌﾞ | 1 |
| | 003 | 130301030 | ｽﾅｯﾌﾟﾘﾝｸﾞ H-30 | 1 |
| | 004 | 130132230 | ﾆｰﾄﾞﾙﾍﾞｱﾘﾝｸﾞ TA-223016 | 1 |
| | 005 | 134501016 | Uﾅｯﾄ M16 | 1 |
| | 006 | 131301016 | ｽﾌﾟﾘﾝｸﾞﾜｯｼｬｰ M16 | 1 |
| | 007 | 130802047 | ｽﾛｯﾄﾙﾊﾞﾙﾌﾞｽﾌﾟﾘﾝｸﾞ | 1 |
| | 008 | 420645AH0 | ｽﾛｯﾄﾙﾊﾞﾙﾌﾞSP.ｼｰﾄ | 1 |
| | 009 | 420645DDA | ｽﾛｯﾄﾙﾊﾞﾙﾌﾞﾊﾝﾄﾞﾙ CP | 1 |
| | A | 420645DEA | T.V.ﾊﾝﾄﾞﾙA(ﾋﾟﾝﾂｷ) | 1 |
| | B | 420645DJ0 | T.V.ﾊﾝﾄﾞﾙ B(L) | 1 |
| | C | 420645DL0 | T.V.ﾊﾝﾄﾞﾙ B(R) | 1 |
| | D | 131502031 | ｽﾛｯﾄﾙﾊﾞﾙﾌﾞﾊﾝﾄﾞﾙﾎﾞﾙﾄ | 2 |
| | E | 134401008 | ﾛｯｶｸﾅｯﾄ M8(ｸﾛ) | 2 |
| | F | 131301008 | ｽﾌﾟﾘﾝｸﾞﾜｯｼｬｰ M 8 | 2 |
| | 012 | 420645CU0 | ﾘﾐｯﾄｾｸﾀｰｷﾞｬ | 1 |
| | 013 | 420645CV0 | ﾘﾐｯﾄｾｸﾀｰｷﾞｬｼｬﾌﾄ | 1 |
| | 014 | 130703025 | ﾜﾘﾋﾟﾝ 3X25 | 2 |
| | 015 | 420645KTB | ｾﾌﾃｲｽﾄｯﾊﾟｰCP | 1 |
| | 016 | 420725CA0 | ﾘﾔｼﾘﾝﾀﾞｰｶﾊﾞｰ | 1 |
| | 017 | 420725CC0 | ﾘﾔｼﾘﾝﾀﾞｰｶﾊﾞｷｬｯﾌﾟ | 1 |
| | 018 | 131706015 | ﾛｯｶｸｱﾅｯｷﾎﾞﾙﾄ M6X15 | 6 |
| | 019 | 420725EH0 | ﾌﾞﾚ - ｷ ﾋﾟ - ｽ | 1 |
| | 020 | 130605035 | ｽﾌﾟﾘﾝｸﾞﾋﾟﾝ 5X35 | 1 |
| | 021 | 420725EF0 | ﾌﾞﾚｰｷﾋﾟｽﾄﾝ | 1 |
| | 022 | 131101038 | Oﾘﾝｸﾞ P-38 | 1 |
| | 023 | 130802049 | ﾌﾞﾚｰｷSP | 1 |
| | 024 | 136102050 | ｼﾘﾝﾀﾞｰｶﾊﾞｰﾊﾟｯｷﾝ | 1 |
| | 025 | 420645BT0 | ｼﾘﾝﾀﾞｰ | 1 |
| | 026 | 130606018 | ｽﾌﾟﾘﾝｸﾞﾋﾟﾝ 6X18 | 1 |
| | 027 | 420645BP2 | ﾛｰﾀ (ｼﾔﾌﾄｲﾂﾀｲｶﾞﾀ) | 1 |
| | 028 | 137102003 | ﾍﾞｰﾝ | 8 |
| | 029 | 420645UKA | ﾍﾞｱﾘﾝｸﾞﾘﾝｸﾞCP | 2 |
| | 030 | 420645BS0 | ﾛｰﾀｰﾘﾝｸﾞ | 2 |
| | 031 | 420645CFF | ﾌﾛﾝﾄｼﾘﾝﾀﾞｰｶﾊﾞｰ CP | 1 |
| | A | 420645CF1 | ﾌﾛﾝﾄｼﾘﾝﾀﾞｰｶﾊﾞｰ (ﾇｽﾐ ｲﾘ) | 1 |
| | B | 420645CG0 | ﾌﾛﾝﾄｼﾘﾝﾀﾞｶﾊﾞｰﾘﾝｸﾞ | 1 |
| | C | 136302012 | ｴﾚﾒﾝﾄ | 1 |
| | 032 | 420645CT0 | ﾌﾛﾝﾄｼﾘﾝﾀﾞｰｶﾊﾞｰｷｬｯﾌﾟ | 1 |
| | 033 | 130402001 | ﾛｰﾗｰ 7,7X10,6 | 17 |
| | 034 | 420645CR0 | ﾛｰﾗﾍﾞｱﾘﾝｸﾞｱｳﾄﾚｰｽ S | 1 |
| | 035 | 420645NU0 | ﾛｰﾗﾍﾞｱﾘﾝｸﾞｲﾝﾅｰｼｰﾄ S | 2 |
| | 036 | 131201008 | ｵｲﾙｼｰﾙ ZF- 8 | 1 |
| | 037 | 420645CY1 | ｵｲﾙﾌﾟﾗｸﾞ (ﾇｽﾐ ﾅｼ) | 1 |
| | 038 | 131105006 | Oﾘﾝｸﾞ 6227-6 | 1 |
| | 040 | 420645GGA | ｷﾞﾔｻｲﾄﾞｶﾊﾞｰCP | 1 |
| | A | 420645GG0 | ｷﾞﾔｻｲﾄﾞｶﾊﾞｰ | 1 |
| | B | 420645CS0 | ﾛｰﾗﾍﾞｱﾘﾝｸﾞｱｳﾄﾚｰｽ L | 1 |
| | C | 420645CQ0 | ﾛｰﾗﾍﾞｱﾘﾝｸﾞｲﾝﾅｼｰﾄ L | 1 |
| | D | 420645CL0 | ﾛｰﾗﾍﾞｱﾘﾝｸﾞｱｳﾄｼｰﾄ L | 1 |
| | E | 130402001 | ﾛｰﾗｰ 7,7X10,6 | 20 |
| | 041 | 131201009 | ｵｲﾙｼｰﾙ ZF- 9 | 1 |
| | 051 | 420645GK0 | ﾄﾞﾗｲﾌﾞﾋﾟﾆｵﾝ | 1 |
| | 052 | 420645FL0 | ｱ ｲﾄﾞ ﾙ ｷﾞ ｬ - | 3 |
| | 053 | 420645FNB | ｱｲﾄﾞﾙｷﾞﾔｰｼﾔﾌﾄCP | 3 |
| | 054 | 130131215 | ﾆｰﾄﾞﾙﾍﾞｱﾘﾝｸﾞ TA-1215 (HMK) | 6 |
| | 055 | 420645FU0 | ｱｲﾄﾞﾙｷﾞﾔﾌﾚｰﾑ (ｼﾝ) | 1 |
| | 056 | 130802045 | ｱｲﾄﾞﾙｷﾞﾔｾｯﾄﾘﾝｸﾞ | 1 |
| | 057 | 420645GAB | ｷﾞﾔﾌﾚｰﾑﾎﾞｰﾙﾎﾙﾀﾞｰ CP | 2 |
| | 058 | 420645FY0 | ｷﾞﾔｰﾌﾚｰﾑｲﾝﾅｰﾚｰｽ S | 1 |
| | 059 | 420645FGA | ｷﾞﾔｹｰｽCP | 1 |
| | A | 420645FG0 | ｷﾞﾔｹｰｽ | 1 |
| | B | 420645GH1 | ｲﾝﾀｰﾅﾙｷﾞﾔ | 1 |

| ※ | 品番 | 部品ｺｰﾄﾞ | 部品名 | 要数 |
|---|---|---|---|---|
| | C | 130305118 | ｻｰｸﾘｯﾌﾟ AR-118 (SB-118) | 1 |
| | D | 420645FA0 | ｸﾞﾘｰｽﾌﾟﾗｸﾞ | 1 |
| | E | 131101012 | Oﾘﾝｸﾞ P-12 | 1 |
| | 060 | 420645GB0 | ﾍﾞｱﾘﾝｸﾞﾎﾞｯｸｽ | 1 |
| | 061 | 130107002 | ﾍﾞｱﾘﾝｸﾞ 6201 | 1 |
| | 062 | 131708021 | ﾛｯｶｸｱﾅｯｷﾎﾞﾙﾄ M8X21X11(ﾄｸ) | 4 |
| | 063 | 134905026 | ﾍﾞｱﾘﾝｸﾞｷｬｯﾌﾟ | 1 |
| | 066 | 420645GL0 | ﾛｰﾄﾞ ｷﾞﾔ | 1 |
| | 067 | 420645FZ0 | ｷﾞﾔｰﾌﾚｰﾑｲﾝﾅｰﾚｰｽ L | 1 |
| | 068 | 131709100 | ﾛｯｶｸｱﾅｯｷﾎﾞﾙﾄ W3/8 X100 | 4 |
| | 069 | 420645GE0 | ﾌﾗｯｼｭﾎﾞﾙﾄ 3/8 | 2 |
| | 070 | 134411010 | ﾛｯｶｸﾅｯﾄ W3/8 16ﾔﾏ | 8 |
| | 071 | 131303024 | ｽﾌﾟﾘﾝｸﾞﾜｯｼｬｰ W3/8 | 12 |
| | 072 | 136102051 | ｷﾞﾔｹｰｽﾊﾟｯｷﾝ | 1 |
| | 081 | 420646HM0 | ﾛｰﾄﾞｼｰﾌﾞ | 1 |
| | 082 | 138109065 | ﾁｪﾝ 10MM X 6.5M (ISO) | 0 |
| | 083 | 420646HU0 | ﾁｪｰﾝ ｶﾞｲﾄﾞ | 1 |
| | 084 | 420646YG0 | ﾁｪｰﾝｾﾊﾟﾚｰﾀｰ | 1 |
| | 085 | 420645YJ0 | ﾁｪｰﾝｾﾊﾟﾚｰﾀｰﾋﾟﾝ | 1 |
| | 086 | 420645GS0 | ﾐﾄﾞﾙ ﾌﾟﾚｰﾄ M | 1 |
| | 087 | 420645GX0 | ﾐﾄﾞﾙ ﾌﾟﾚｰﾄ G | 1 |
| | 088 | 420645HR0 | ﾁｪｰﾝｾｯﾄﾌﾟﾚｰﾄ | 2 |
| | 089 | 420645HS0 | ﾁｪｰﾝｾｯﾄﾌﾟﾚｰﾄｼｬﾌﾄ | 1 |
| | 090 | 420646HT0 | ﾁｪｰﾝｾｯﾄﾘﾝｸﾞ | 1 |
| | 091 | 420645YW1 | CHｾｯﾄｽﾋﾟﾝﾄﾞﾙ(ﾈｼﾞ) | 1 |
| | 092 | 134501010 | Uﾅｯﾄ M10 | 1 |
| | 101 | 420645PAK | ﾌｯｸ CP | 1 |
| | A | 420645PAJ | ﾌｯｸ (ｾﾌﾃｲｸﾛｰ ﾂｷ) | 1 |
| | A | 420645PF1 | ﾌｯｸ | 1 |
| | B | 420645L30 | ﾌｯｸｾﾌﾃｲｸﾛｰ(ｽﾃﾝﾚｽ) | 1 |
| | C | 130802046 | ﾌｯｸｽﾌﾟﾘﾝｸﾞ | 1 |
| | D | 131704028 | ﾛｯｶｸｱﾅｯｷﾎﾞﾙﾄ M4X28 | 1 |
| | E | 134501004 | Uﾅｯﾄ M4 | 1 |
| | B | 420645PG0 | ﾌｯｸｴﾝﾄﾞﾋﾟｰｽ | 1 |
| | C | 133208035 | ﾏﾙﾋﾞﾖｳ 8X35 | 2 |
| | 102 | 420645QD0 | ｱｯﾊﾟｰﾌｯｸﾎﾞﾙﾄ | 1 |
| | 103 | 134501012 | Uﾅｯﾄ M12 | 1 |
| | 104 | 131307012 | ﾋﾗｻﾞｶﾞﾈ M12 ﾐｶﾞｷﾏﾙ | 1 |
| | 105 | 420645PAK | ﾌｯｸ CP | 1 |
| | A | 420645PAJ | ﾌｯｸ (ｾﾌﾃｲｸﾛｰ ﾂｷ) | 1 |
| | A | 420645PF1 | ﾌｯｸ | 1 |
| | B | 420645L30 | ﾌｯｸｾﾌﾃｲｸﾛｰ(ｽﾃﾝﾚｽ) | 1 |
| | C | 130802046 | ﾌｯｸｽﾌﾟﾘﾝｸﾞ | 1 |
| | D | 131704028 | ﾛｯｶｸｱﾅｯｷﾎﾞﾙﾄ M4X28 | 1 |
| | E | 134501004 | Uﾅｯﾄ M4 | 1 |
| | B | 420645PG0 | ﾌｯｸｴﾝﾄﾞﾋﾟｰｽ | 1 |
| | C | 133208035 | ﾏﾙﾋﾞﾖｳ 8X35 | 2 |
| | 106 | 420645QE0 | ｱﾝﾀﾞｰﾌｯｸﾎﾞﾙﾄ | 1 |
| | 107 | 134501012 | Uﾅｯﾄ M12 | 1 |
| | 108 | 131307012 | ﾋﾗｻﾞｶﾞﾈ M12 ﾐｶﾞｷﾏﾙ | 1 |
| | 109 | 420646RA0 | ﾌﾘｰﾁｪｰﾝﾎｲﾙﾌﾚｰﾑ | 1 |
| | 110 | 420646RB0 | ﾌﾘｰﾁｪｰﾝﾎｲﾙ | 1 |
| | 111 | 420645RE0 | ﾌﾘｰﾁｪﾝﾎｲﾙｼｬﾌﾄ | 1 |
| | 112 | 130606010 | ｽﾌﾟﾘﾝｸﾞﾋﾟﾝ 6X10 | 1 |
| | 113 | 130706035 | ﾜﾘﾋﾟﾝ 6X35 | 2 |
| | 116 | 420645JF0 | ﾁｪｰﾝﾀﾞｳﾝｽﾄｯﾊﾟｰCP | 2 |
| | 117 | 131708035 | ﾛｯｶｸｱﾅｯｷﾎﾞﾙﾄ M8X 35 | 2 |
| | 118 | 134401008 | ﾛｯｶｸﾅｯﾄ M8(ｸﾛ) | 2 |
| | 119 | 131301008 | ｽﾌﾟﾘﾝｸﾞﾜｯｼｬｰ M 8 | 2 |
| | 120 | 420645YY0 | ﾁｪｰﾝｴﾝﾄﾞｾｯﾄﾎﾞﾙﾄ | 1 |
| | 121 | 134401010 | ﾛｯｶｸﾅｯﾄ M10 | 1 |
| | 122 | 131301010 | ｽﾌﾟﾘﾝｸﾞﾜｯｼｬｰ M10 | 1 |
| | 124 | 130802081 | Sｶﾞﾀﾜｲﾔ (ｼﾖｳ) | 2 |
| | 125 | 138001015 | ｴｱﾁｪﾝﾌﾞﾛｯｸ ﾁｪﾝｼﾞｺｰﾄﾞ 1.5M | 2 |
| | 126 | 136602625 | ｸﾞﾘｯﾌﾟ(W) | 1 |
| | 127 | 136602626 | ｸﾞﾘｯﾌﾟ(R) | 1 |
| | 128 | 136602627 | ﾊﾝﾄﾞﾙ | 1 |
| | 131 | 134800101 | 5/8 ﾎｰｽｽﾃｰﾑ | 1 |
| | 132 | 135600101 | 5/8 ﾎｰｽﾅｯﾄ | 1 |

| ※ | 品番 | 部品ｺｰﾄﾞ | 部品名 | 要数 |
|---|---|---|---|---|
| | | | | |

# TC-3000C2

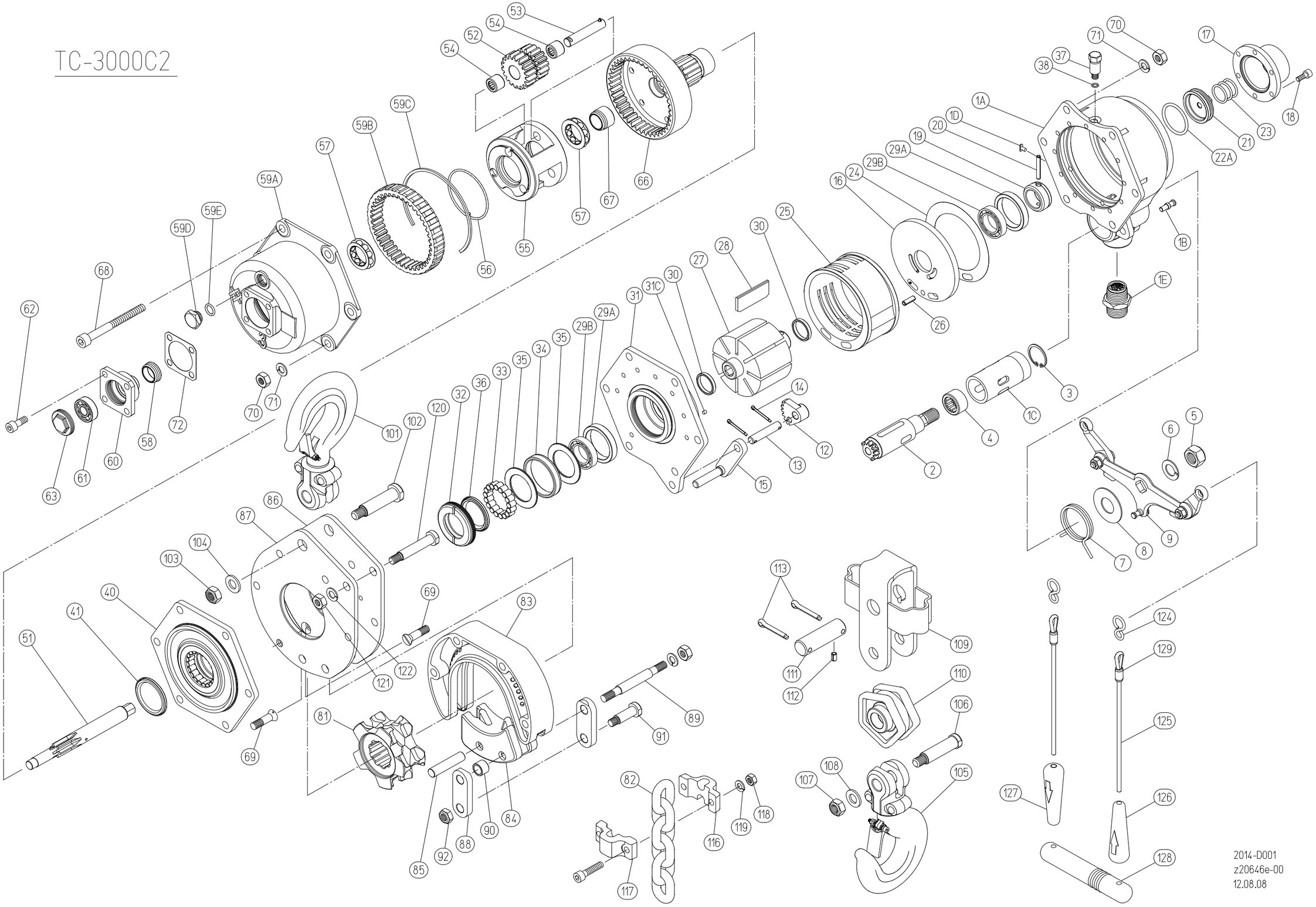
53
54
52
54
59C
59B
57
59A
59E
59D
68
62
63
61
60
58
72
70
71
101
102
120
32
36
33
35
34
35
29B
29A
31
31C
30
27
28
30
25
16
24
29B
29A
19
20
1D
1A
38
37
71
70
17
18
23
21
22A
1B
1E
26
3
1C
4
2
14
12
13
15
6
5
9
8
7
124
129
125
126
128
127
87
86
104
103
40
41
51
69
121
122
83
81
69
89
91
84
90
88
92
85
82
117
116
119
118
113
111
112
109
110
106
105
107
108
2014-D001
z20646e-00
12.08.08